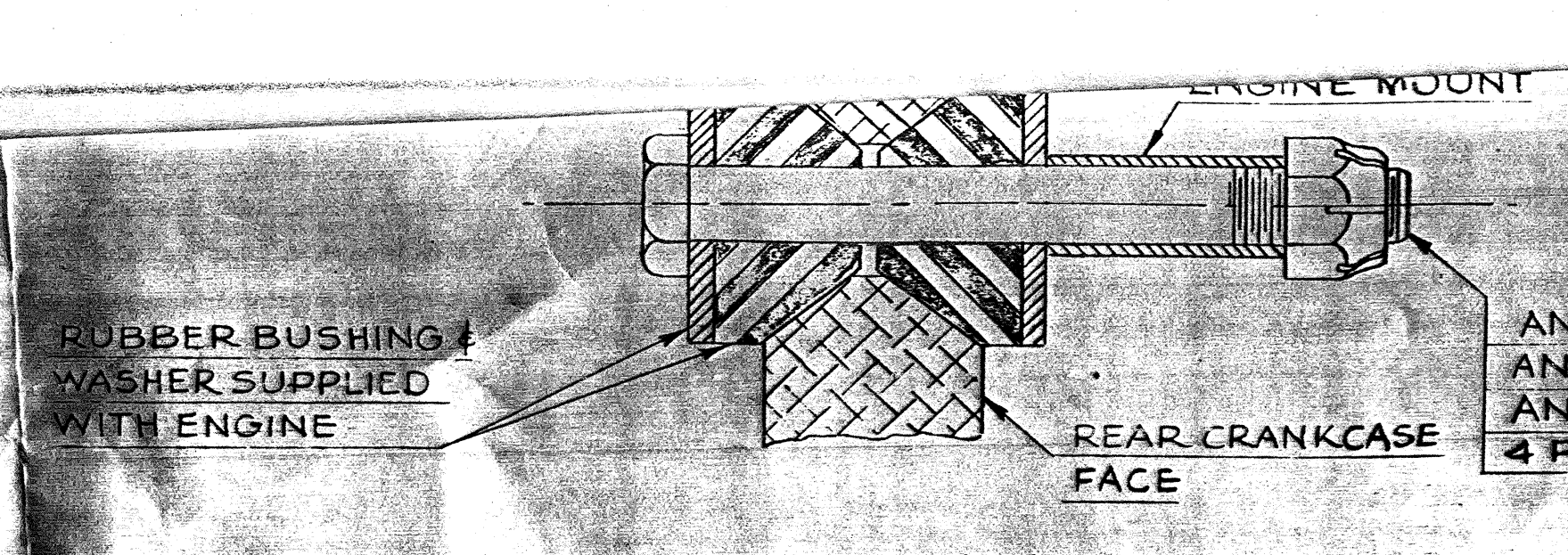
ENGINE MOUNT
RUBBER BUSHING & WASHER SUPPLIED WITH ENGINE
AN8-44
AN310-8
AN380-8-3
4 REQ.
REAR CRANKCASE FACE

SECTION A-A
FULL SIZE

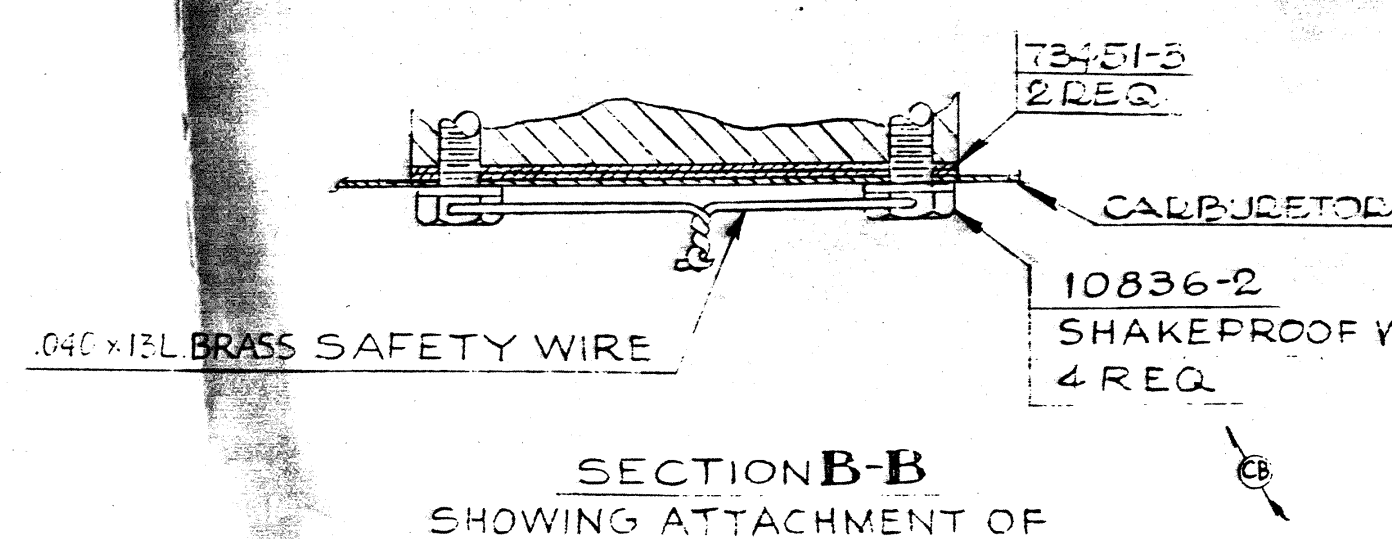
73451-3
2 REQ.
CARBURETOR AIR BOX
.040 x 8L BRASS SAFETY WIRE
10836-2
SHAKEPROOF WASHER TYPE #12 PART #1214
4 REQ.

SECTION B-B
SHOWING ATTACHMENT OF CARBURETOR HEAT BOX
FULL SIZE

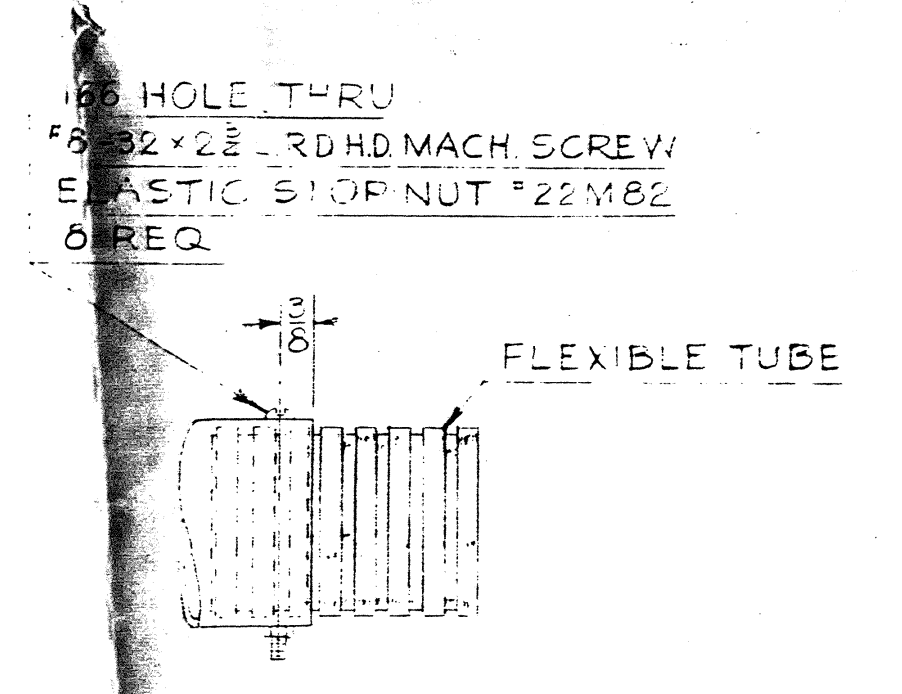
.166 HOLE THRU
#6-32 x 2 3/4 RD. HD. MACH. SCREW
ELASTIC STOP NUT #22M62
8 REQ.
FLEXIBLE TUBE

FIG. 1
TYPICAL ATTACH OF FLEXIBLE TUBES

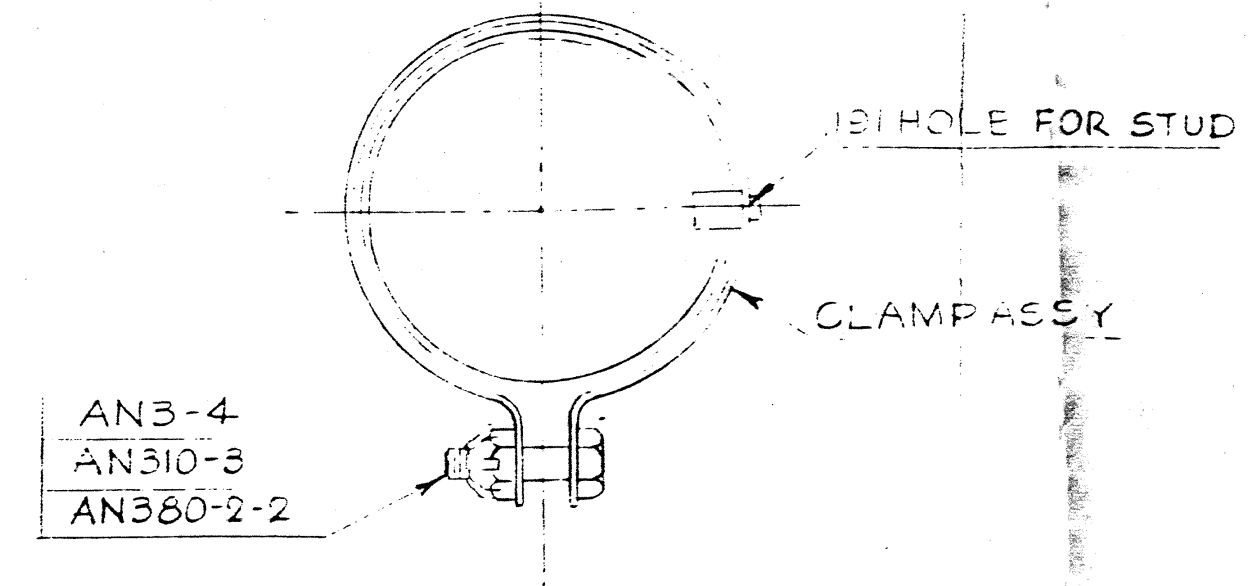
.191 HOLE FOR STUD
CLAMP ASSY
AN3-4
AN310-3
AN380-2-2

FIG. 2
CLAMP ATTACH DETAIL
FULL SIZE

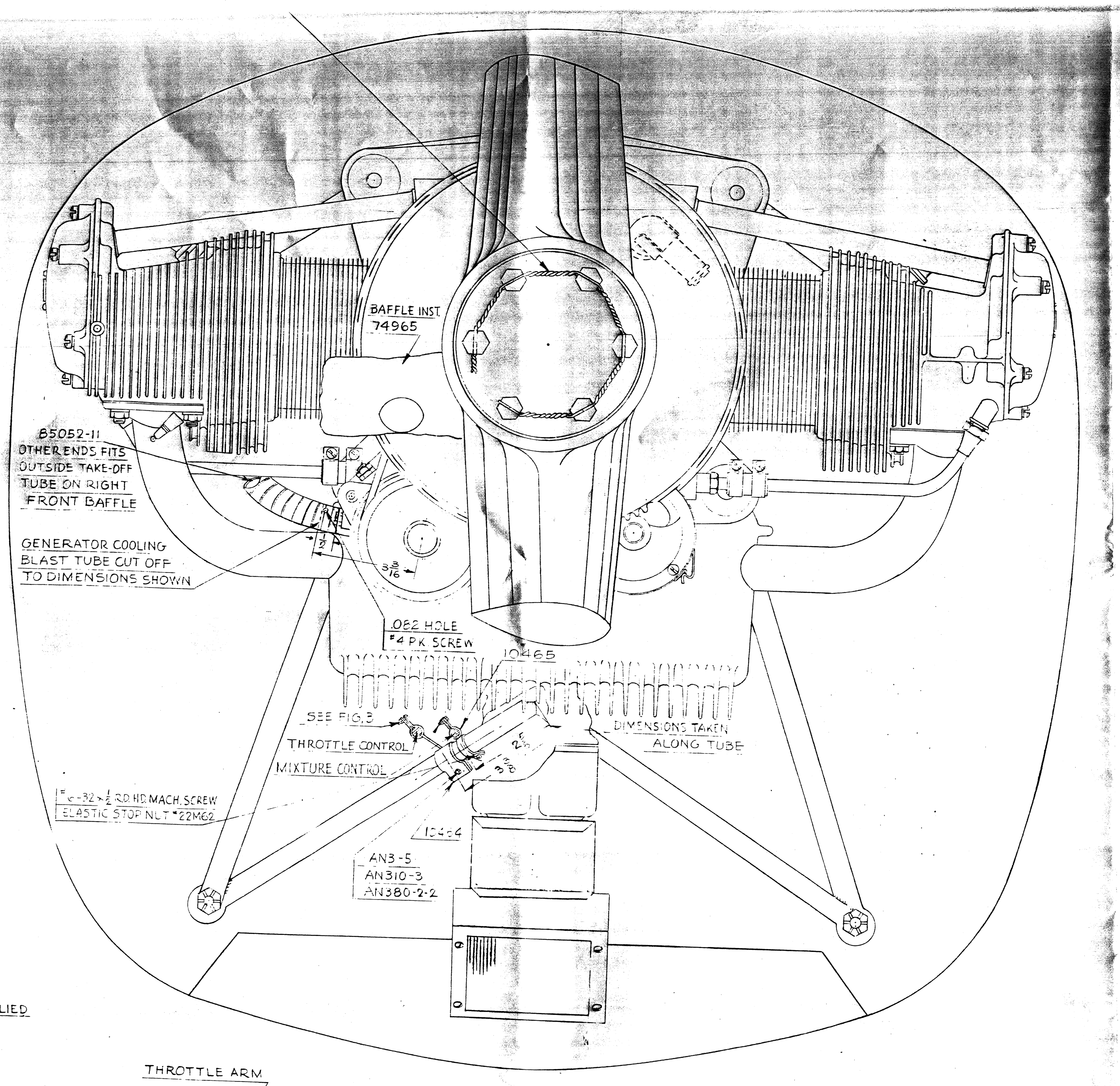
BAFFLE INST.
74965
85052-11
OTHER ENDS FITS OUTSIDE TAKE-OFF TUBE ON RIGHT FRONT BAFFLE
GENERATOR COOLING BLAST TUBE CUT OFF TO DIMENSIONS SHOWN
.082 HOLE
#4 PK SCREW
10465
SEE FIG. 3
THROTTLE CONTROL
MIXTURE CONTROL
DIMENSIONS TAKEN ALONG TUBE
#10-32 x 1/2 RD. HD. MACH. SCREW
ELASTIC STOP NUT #22M62
10464
AN3-5
AN310-3
AN380-2-2

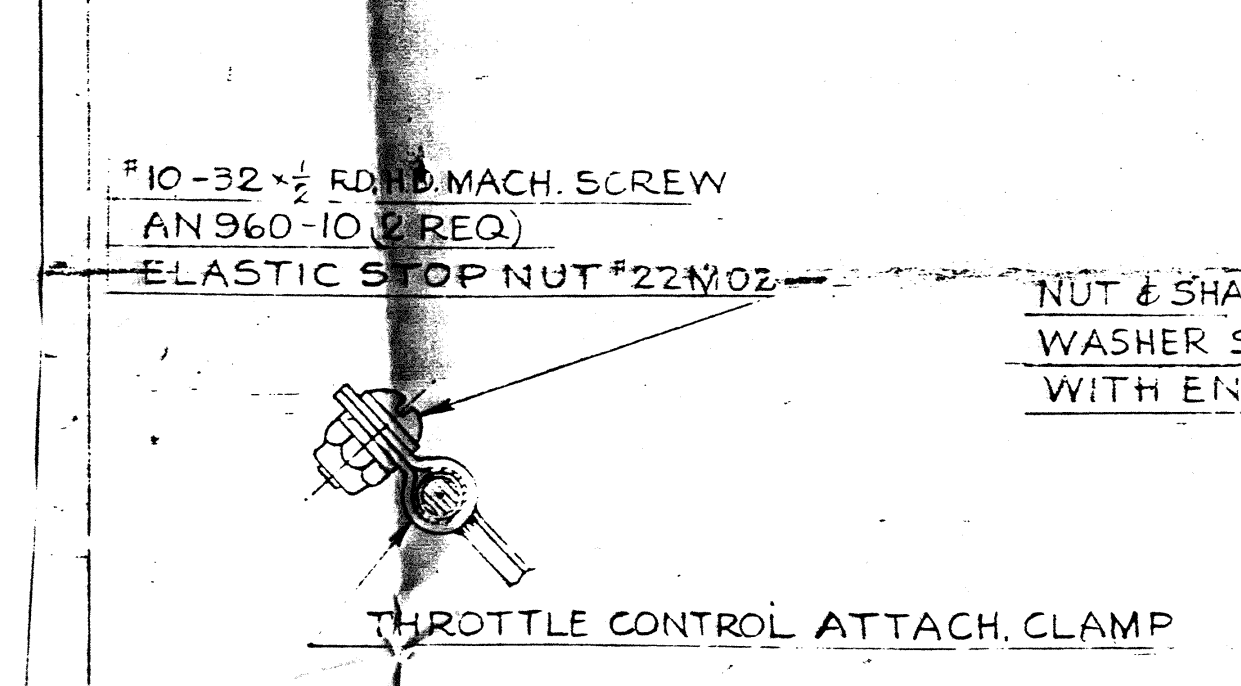
#10-32 x 1/2 RD. HD. MACH. SCREW
AN960-10 (2 REQ.)
ELASTIC STOP NUT #22M02
THROTTLE CONTROL ATTACH CLAMP

FIG. 3
FULL SIZE

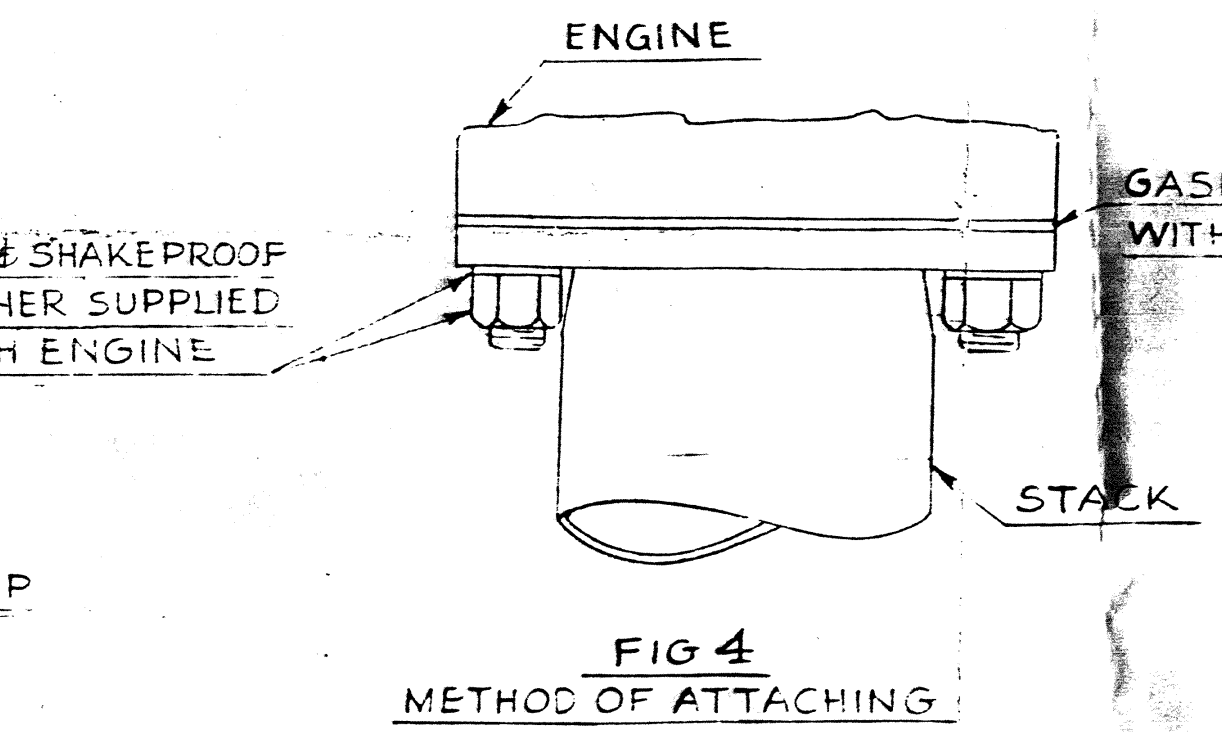
ENGINE
GASKET SUPPLIED WITH ENGINE
NUT & SHAKEPROOF WASHER SUPPLIED WITH ENGINE
STACK

FIG. 4
METHOD OF ATTACHING EXHAUST STACKS TO ENGINE
FULL SIZE

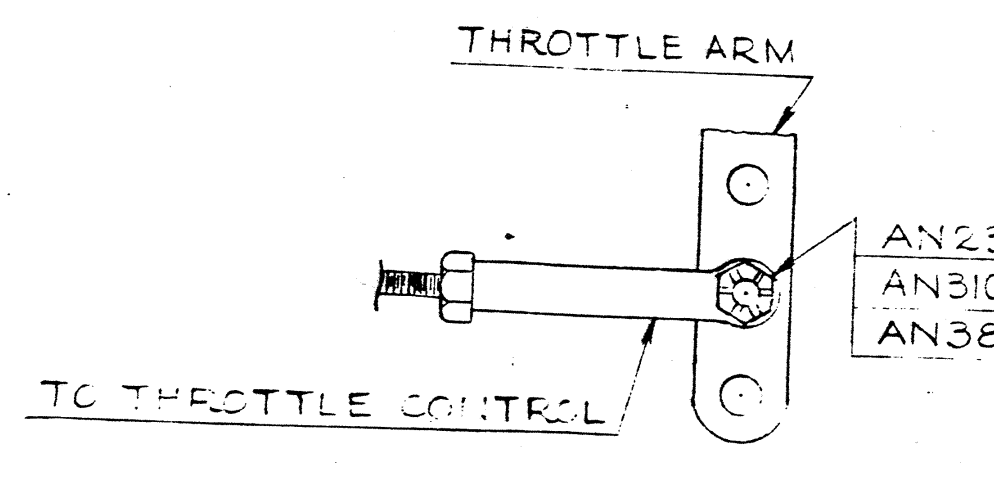
THROTTLE ARM
AN23-12
AN310-3
AN380-2-2
TO THROTTLE CONTROL

FIG. 7
FULL SIZE

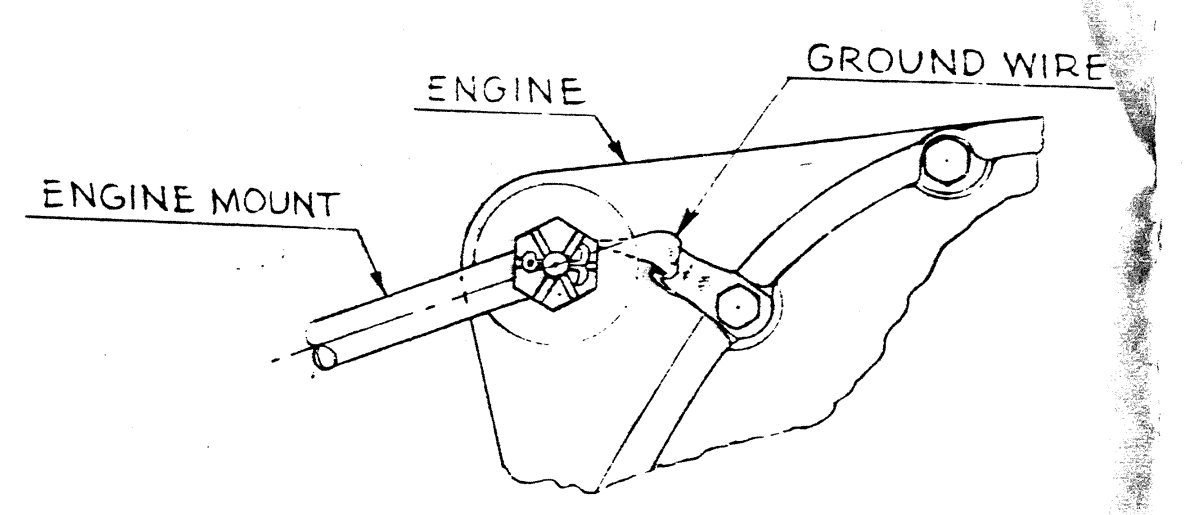
ENGINE
GROUND WIRE
ENGINE MOUNT

FIG. 8
FULL SIZE
GROUND WIRE ATTACHMENT TO ENGINE

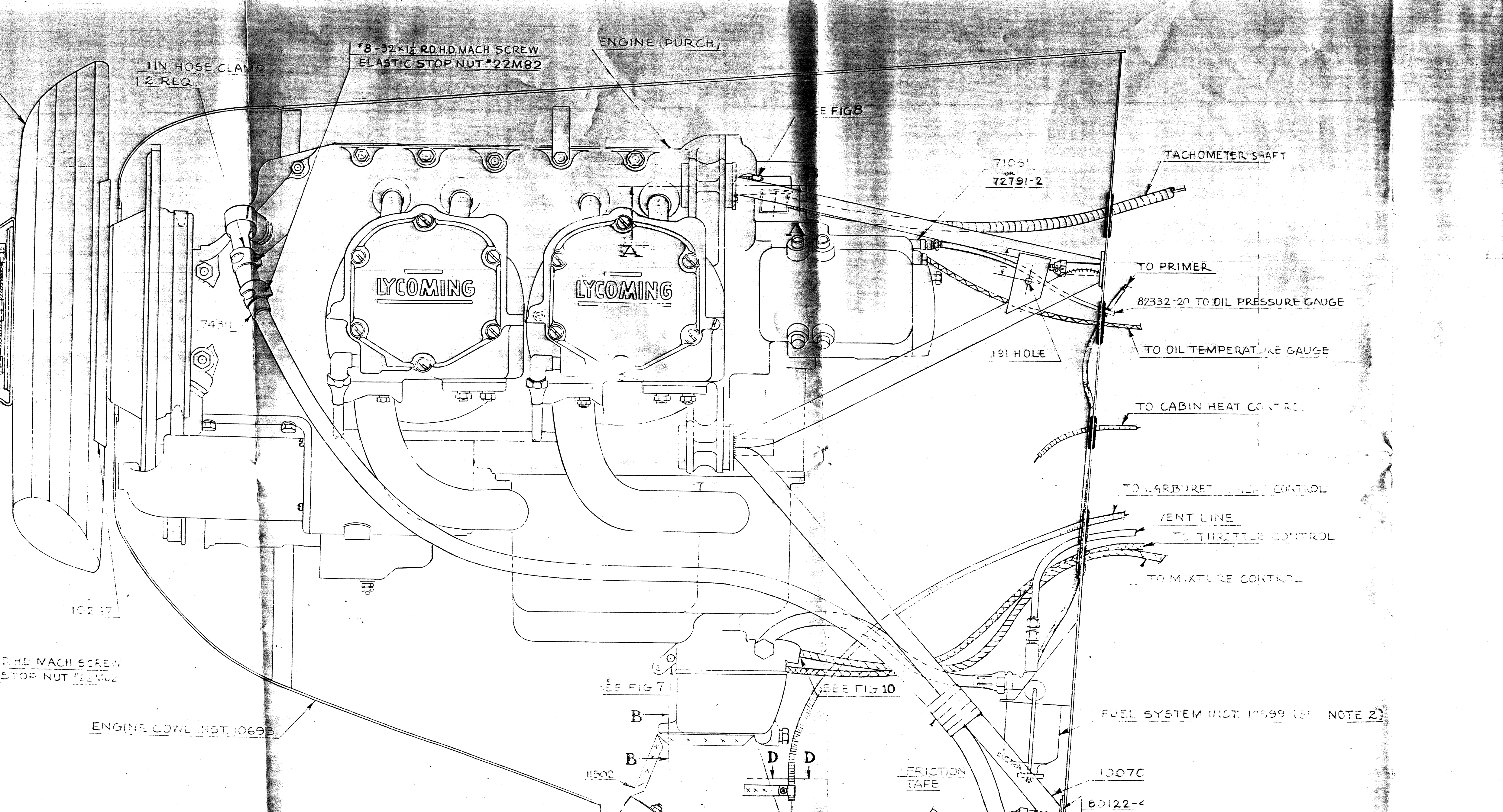
PROPELLER (PURCH.)
1 IN. HOSE CLAMP
2 REQ.
#8-32 x 1 1/4 RD. HD. MACH. SCREW
ELASTIC STOP NUT #22M62
ENGINE (PURCH.)
SEE FIG. 8
71061
72791-2
TACHOMETER SHAFT
LYCOMING
LYCOMING
TO PRIMER
82332-20 TO OIL PRESSURE GAUGE
TO OIL TEMPERATURE GAUGE
.191 HOLE
74311
73251
TO CABIN HEAT CONTROL
TO CARBURETOR HEAT CONTROL
VENT LINE
TO THROTTLE CONTROL
TO MIXTURE CONTROL
10247
SEE FIG. 7
SEE FIG. 10
ENGINE COWL INST. 10693
FUEL SYSTEM INST. 10899 (SEE NOTE 2)
B
B
D
D
11502
FRICTION TAPE
10070
80122-43
4 REQ.
SEE FIG. 10
10420-2
#10-32 x 2 RD. HD. MACH. SCREW
ELASTIC STOP NUT
4 REQ.

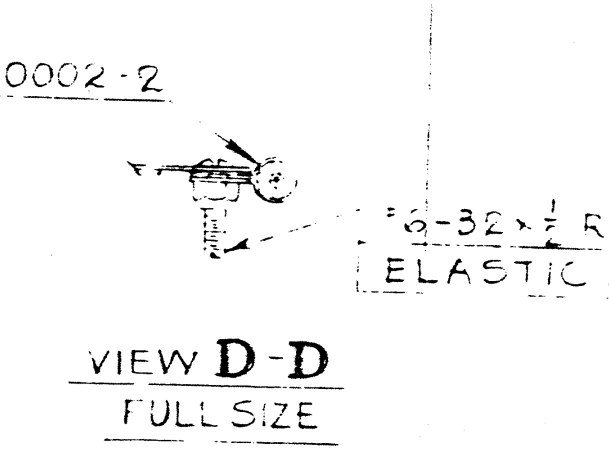
80002-2
#6-32 x 1/2 RD. HD. MACH. SCREW
ELASTIC STOP NUT #22M62

VIEW D-D
FULL SIZE

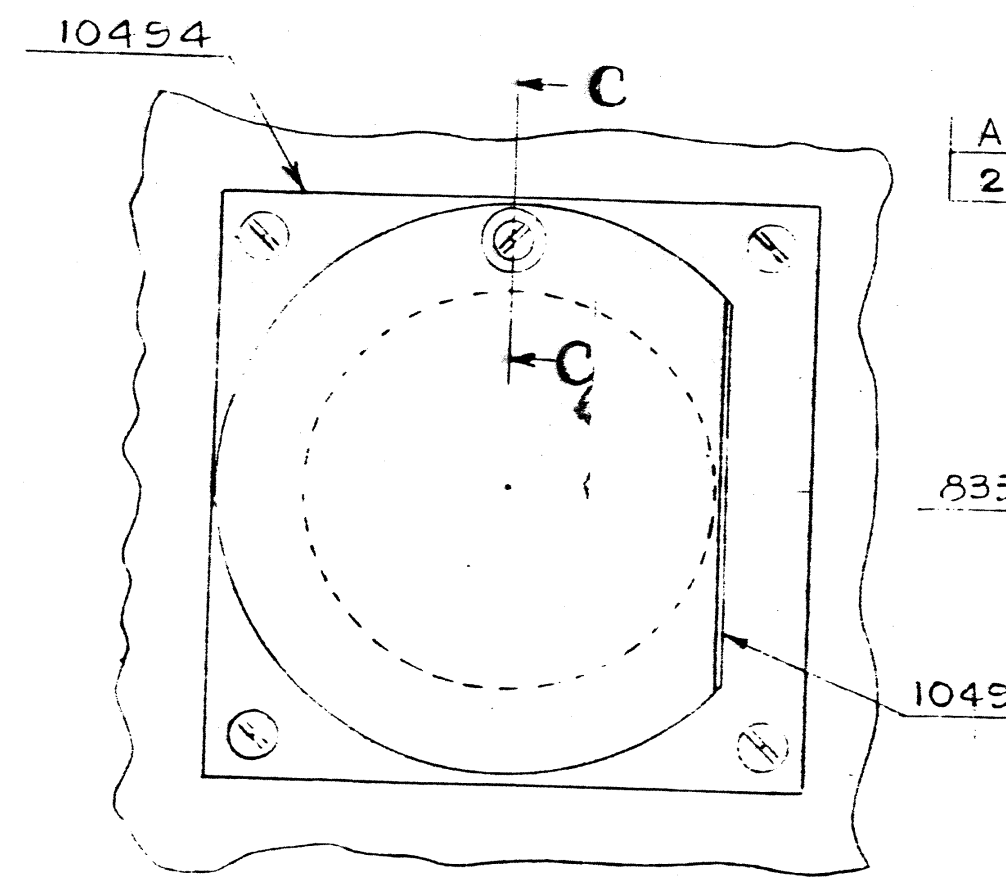
10454
C
C
10495

FIG. 9
CABIN AIR INLET VALVE INST
FULL SIZE

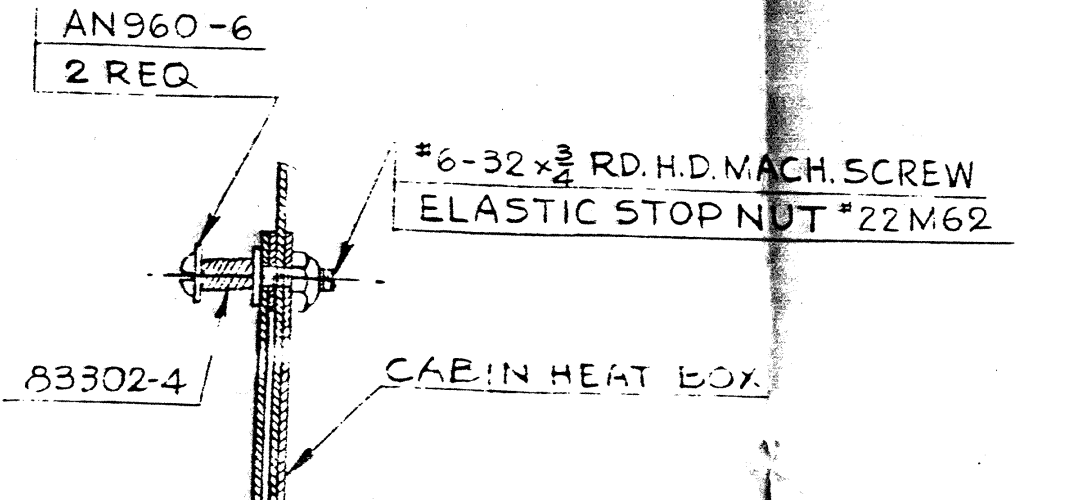
AN960-6
2 REQ.
#6-32 x 1/2 RD. HD. MACH. SCREW
ELASTIC STOP NUT #22M62
83302-4
CABIN HEAT BOX
FIREWALL

SECTION C-C
FULL SIZE

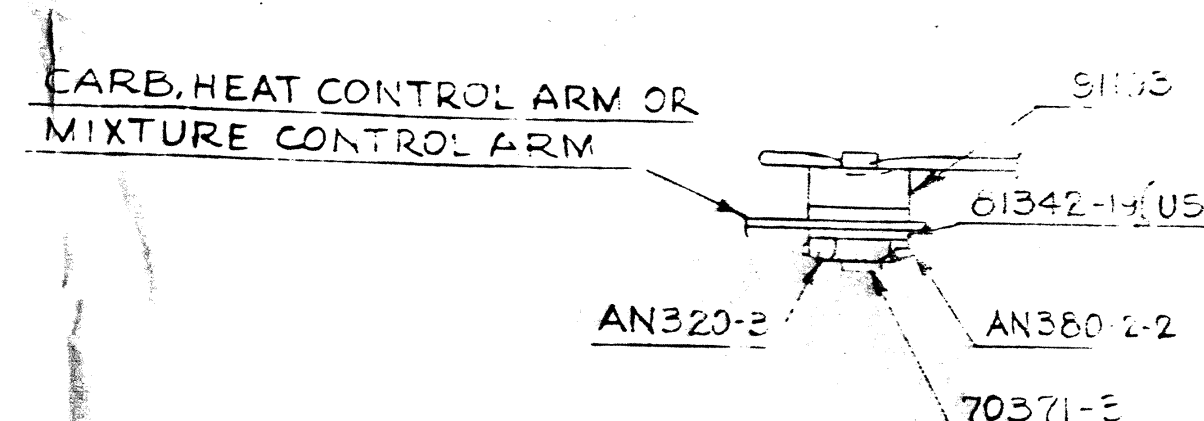
CARB. HEAT CONTROL ARM OR MIXTURE CONTROL ARM
81342-19 (USE ON CARB HEAT CONTROL ONLY)
AN320-3
AN380-2-2
70371-3

FIG. 10
FULL SIZE

ELECTRICAL EQUIPMENT INST. 10178 (SEE NOTE 3)

NOTE:
1. APPLY TAPE AND SHELLAC TO FLEXIBLE CONTROLS AND FLEXIBLE TUBES WHEREVER THERE IS A POSSIBILITY OF RUBBING AGAINST ENGINE OR ADJACENT PARTS.
2. FOR FUEL SYSTEM PARTS NECESSARY TO COMPLETE THE DRAWING SEE BILL OF MATERIAL
3. FOR ELECTRICAL EQUIPMENT PARTS NECESSARY TO COMPLETE THE DRAWING SEE BILL OF MATERIAL
4. WHERE [illegible] ELASTIC STOP NUTS [illegible] OR 42 E) MAY BE USED.

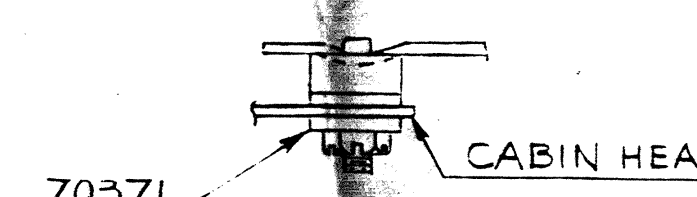
70371
CABIN HEAT CONTROL ARM

FIG. 5
FULL SIZE

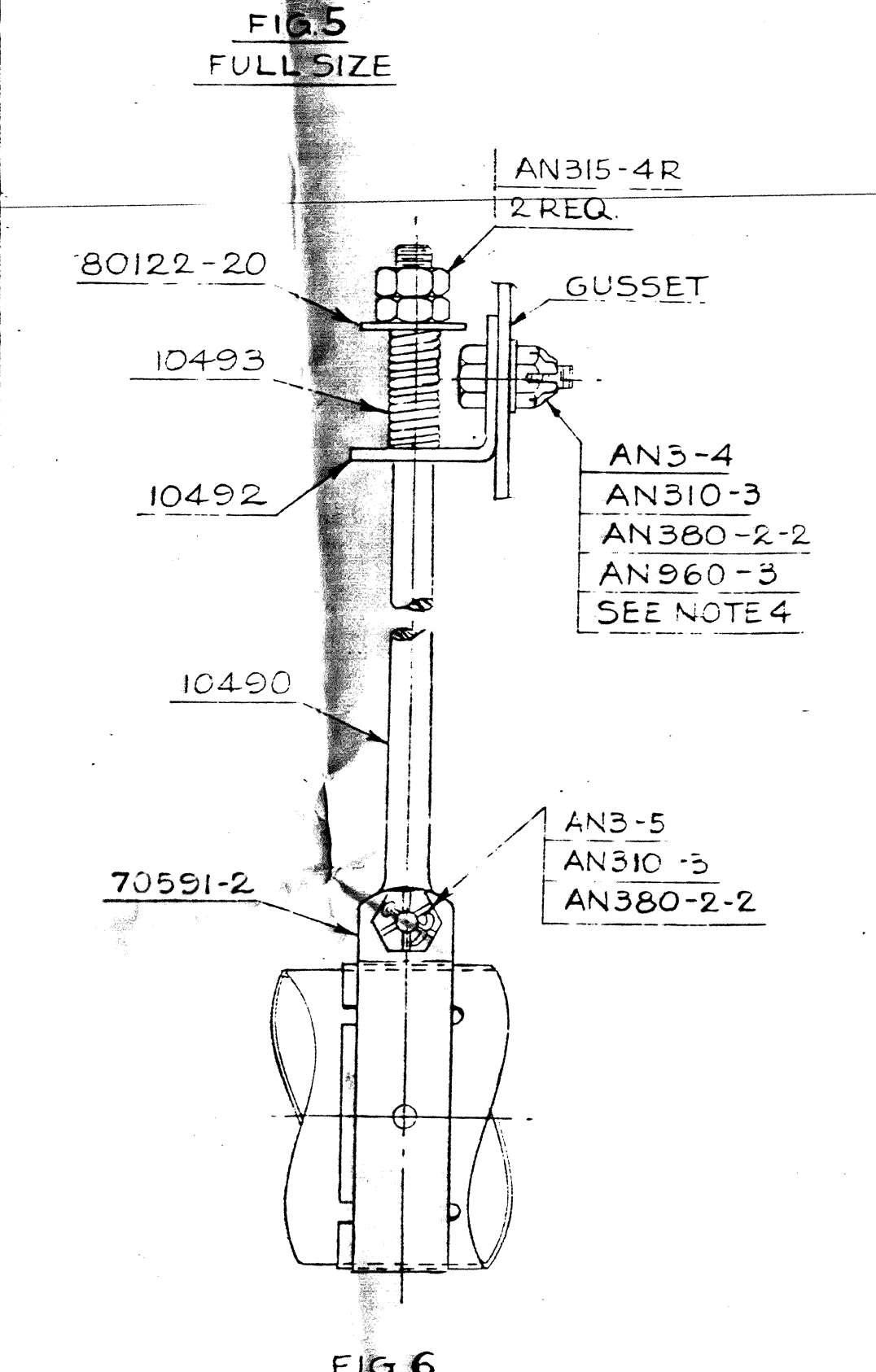
AN315-4R
2 REQ.
GUSSET
80122-20
10493
10492
AN3-4
AN310-3
AN380-2-2
AN960-3
SEE NOTE 4
10490
70591-2
AN3-5
AN310-3
AN380-2-2

FIG. 6
MUFFLER SUPPORT INST
FULL SIZE

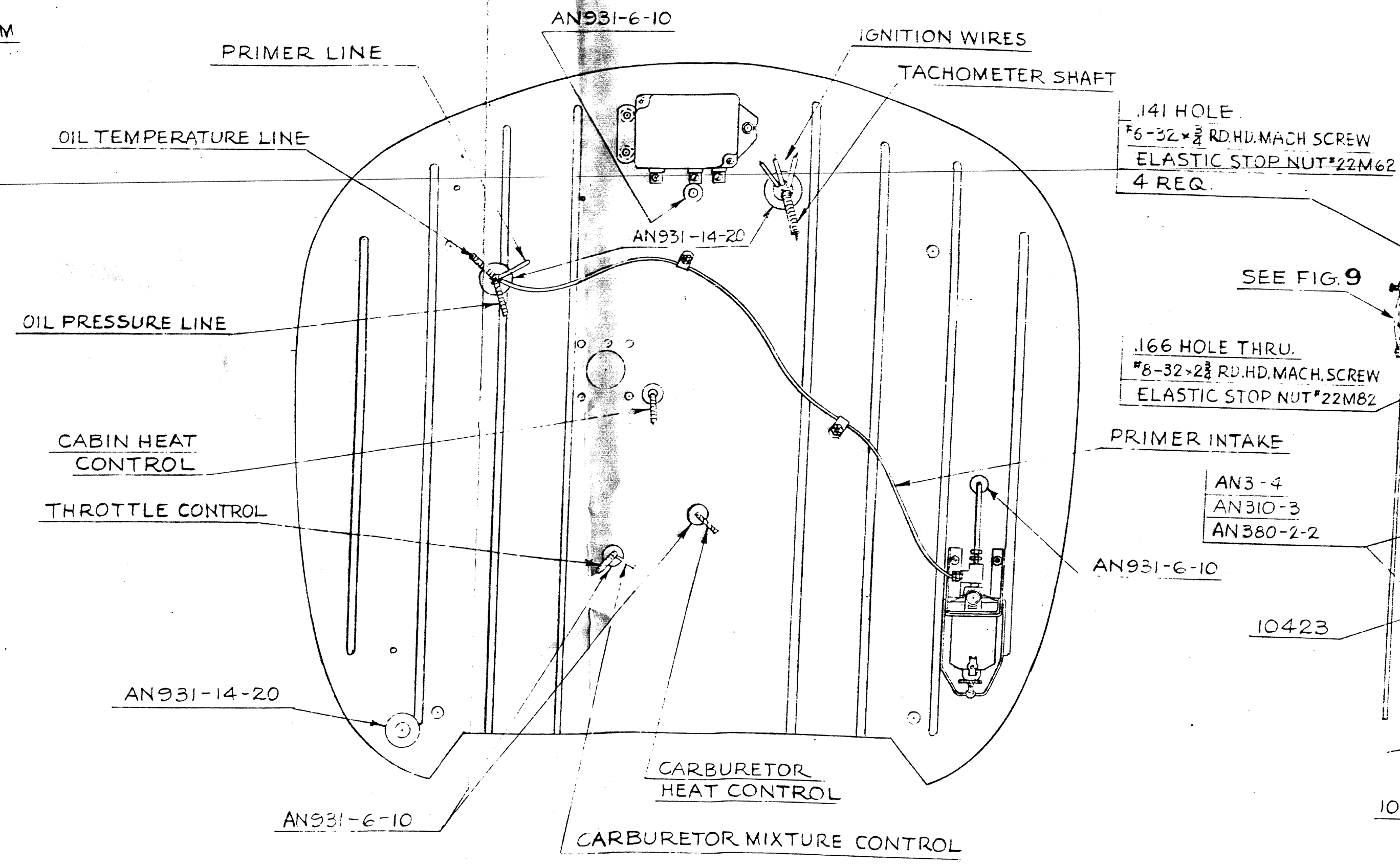
AN931-6-10
IGNITION WIRES
PRIMER LINE
TACHOMETER SHAFT
OIL TEMPERATURE LINE
AN931-14-20
OIL PRESSURE LINE
CABIN HEAT CONTROL
THROTTLE CONTROL
PRIMER INTAKE
AN931-6-10
AN931-14-20
AN931-6-10
CARBURETOR HEAT CONTROL
CARBURETOR MIXTURE CONTROL

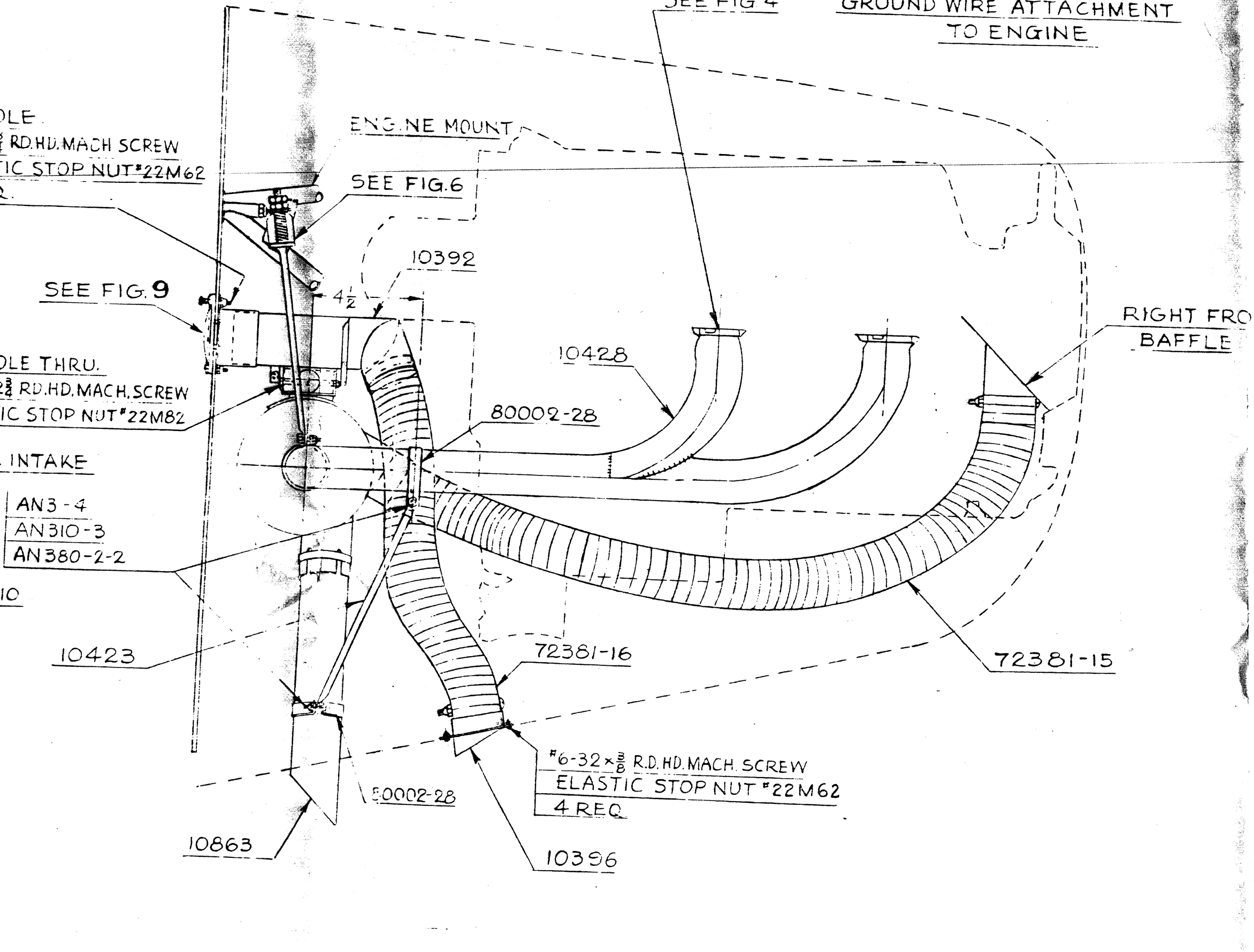
.141 HOLE
#6-32 x 1/2 RD. HD. MACH. SCREW
ELASTIC STOP NUT #22M62
4 REQ.
SEE FIG. 4
ENGINE MOUNT
SEE FIG. 6
10392
SEE FIG. 9
.166 HOLE THRU
#6-32 x 2 3/4 RD. HD. MACH. SCREW
ELASTIC STOP NUT #22M62
10428
80002-28
RIGHT FRONT BAFFLE
AN3-4
AN310-3
AN380-2-2
10423
72381-16
72381-15
10863
80002-28
#6-32 x 3/4 RD. HD. MACH. SCREW
ELASTIC STOP NUT #22M62
4 REQ.
10356

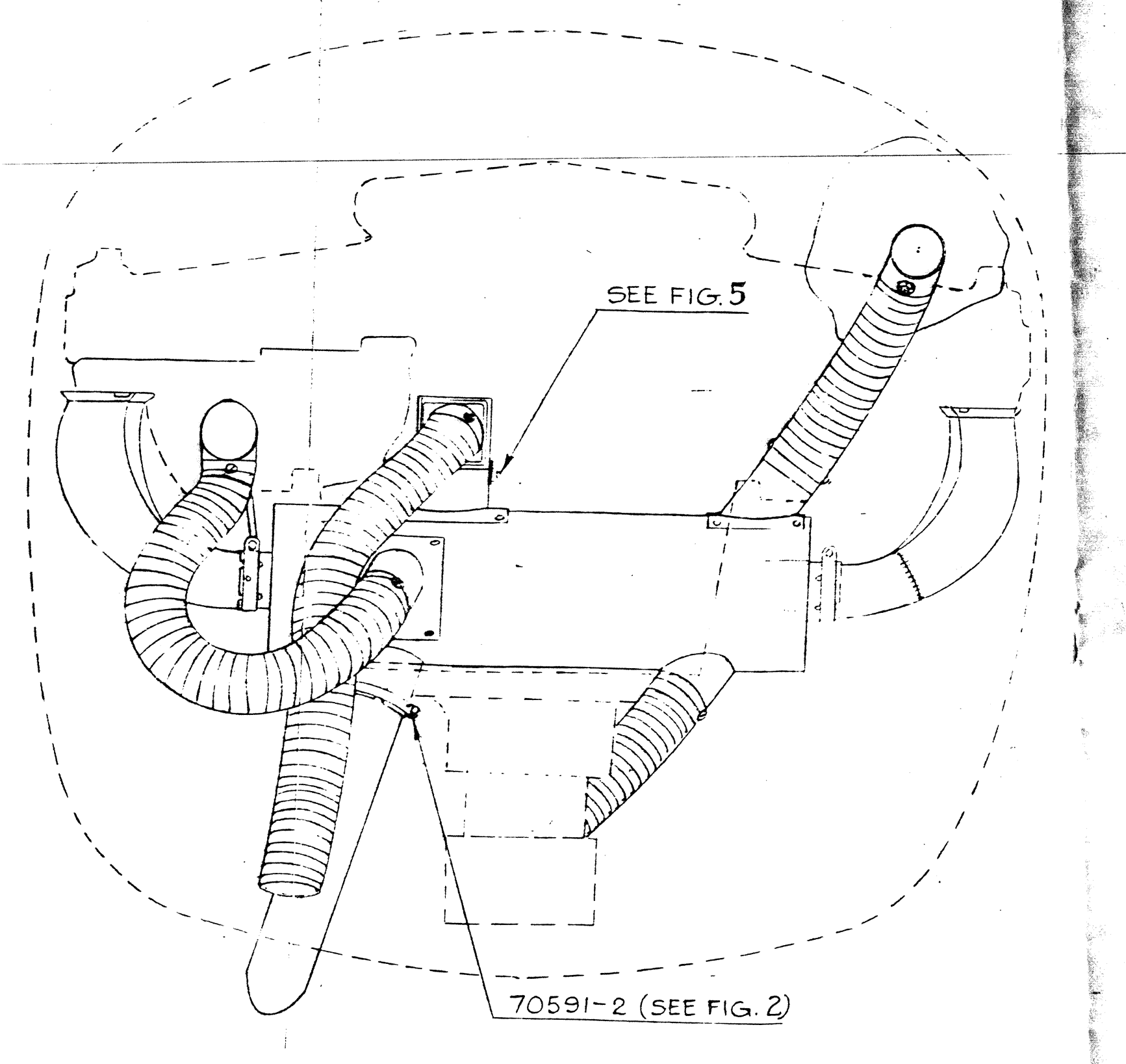
SEE FIG. 5
70591-2 (SEE FIG. 2)

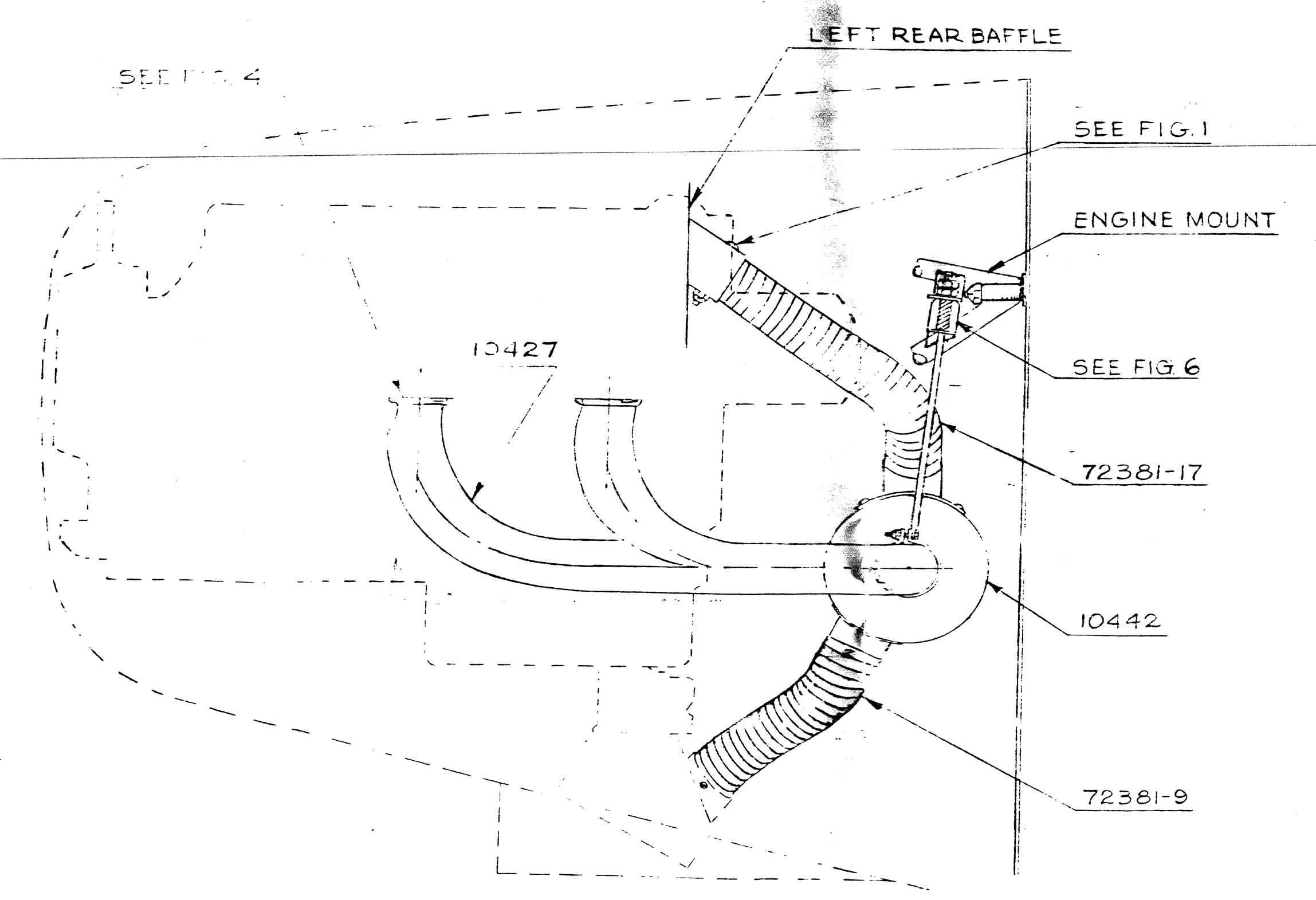
SEE FIG. 4
LEFT REAR BAFFLE
SEE FIG. 1
ENGINE MOUNT
10427
SEE FIG. 6
72381-17
10442
72381-9

PART NO.	NO REQ	SIZE	DESCRIPTION	
#6-32	4	3/8L	#1010 STL. CD. PL. RD. HD. MACH. SCR	
10396	1		TAKE-OFF ASSY	
	2		#22M02 ELASTIC STOP NUT	FOR INST SEE DWG 10178
#10-32	2	1/2L	#1010 STL. CAD. PL. RD. HD. MACH. SCR	
AN960-616	2		WASHER	
AN380-3-3	1		COTTER PIN	
AN320-6	1		NUT	
AN6-5	1		BOLT	
10150	1		CONDUCTOR ASSY	
11415	1		CLAMP ASSY.	
10178	–		ELECTRICAL EQUIP. INST	
	1	1/2 x 12L.	FRICTION TAPE	
	1	.032 x 6L.	BRASS SAFETY WIRE	
	1		MALE CONNEC[illegible]	
	2	3/4	HOSE CLAMP (IDEAL) PURCH. LOCK HAVEN AUTOMOTIVE SUPPLY	
	1	W/H #3750 x 2	TEE PURCH. WEATHERHEAD CO.	
	1	W/H #200 x 4	ADAPTOR PURCH. WEATHERHEAD CO.	
	1	W/H #200 x 2	ADAPTOR PURCH. WEATHERHEAD CO.	
	2	1/8	COMPRESSION NUT #760 PURCH. COMMONWEALTH BRASS CO.	
	2	1/8	BALL SLEEVE #750 PURCH. COMMONWEALTH BRASS CO.	
	3		TINNERMAN CLAMP #A2980A3-199	FOR INST SEE DWG 10899
	6		ELASTIC STOP NUT #22M02	
	1		PLUG #65614 PURCH. AVIATION MFG. CORP. LYCOMING DIVISION.	
#10-32	4	5/8L	#1010 STL. CD. PLATED RD. HD. MACH. SCREW	
AN960-10	4		WASHER	
84742	1		CONNECTOR	
84392	1		TEE	
82371-4	1		FLEXIBLE HOSE	
80032-34	1		CLAMP	
74081	2		PRIMER JET	
	1		GASOLINE FILTER #500 PB PURCH. KEM MFG. CO. INC.	
71991	1		STRAINER BRACKET ASSY	
70322-12	1		FUEL LINE ASSY	
10157	1		PRIMER ASSY.	
10143-25	1		TUBE ASSY	
10143-20	1			
10143-5	1			
10899	–		FUEL SYSTEM INST.	
	2		1 IN. HOSE CLAMP	
			ENGINE #0-235-C OR #0-235-C1 PURCH. AVIATION MFG. CORP. LYCOMING DIV.	
	1		PROPELLER #76 RM44 PURCH. FROM SENSENICH BROS.	
	1	.040 x 38L.	BRASS SAFETY WIRE	
	4		SHAKEPROOF WASHER TYPE #12 PART #1214	
#10-32	4	2L	#1010 STL. CAD. PL. RD. HD. MACH. SCR.	
#4	1	1/4L	TYPE "A" STOVE HD. PK. SCR.	
	5		ELASTIC STOP NUT #22M02	
#10-32	1	1/2L	#1010 STL. CD. PLATED RD. HD. MACH. SCREW	
	11		ELASTIC STOP NUT #22M82	
#8-32	9	2 3/4L	#1010 STL. CD. PLATED RD. HD. MACH. SCREW	
#8-32	2	1 1/4L		
	12		ELASTIC STOP NUT #22M62	
#6-32	5	3/4L	#1010 STL. CD. PLATED RD. HD. MACH. SCREW	
#6-32	3	1/2L		
AN960-10	2		WASHER	
AN960-6	2			
AN960-[illegible]	2			
AN931-14-20	3		GROMMET	
AN931-6-10	5			
AN380-3-3	8		COTTER PIN	
AN380-2-2	11			
AN320-3	2		NUT	
AN315-4R	4			
AN310-8	4			
AN310-6	4			
AN310-3	9			
AN23-12	1		BOLT	
AN8-44	4			
AN3-5	3			
AN3-4	5			
91193	2		FITTING	
85052-11	1		FLEXIBLE TUBE	
83302-4	1		SPRING	
82332-20	1		TUBE ASSY	
81342-19	1		WASHER	
80122-43	4		WASHER	
80122-20	2			
80002-28	2		CLAMP	
80002-2	1			
74965	1		BAFFLE INST.	
74311	1		BREATHER LINE CONNECTOR HOSE	
			PLATE	
73451-3	2			
73251	1		ATTACHMENT PLATE	
72381-17	1		FLEXIBLE TUBE	
72381-16	1			
72381-15	1			
72381-9	1			
72791-2	1		HOSE ASSY	
71061				
70591-2	3		CLAMP ASSY	
70371-3	2		STUD	
70371	1		FITTING	
10863	1		TAILPIPE	
10836-2	4		DRILLED HEAD CAP SCREW	
10693	1		ENGINE COWL INST.	
10495	1		VALVE	
10494	1		PLATE	
10493	2		SPRING	
10492	2		ANGLE	
10490	2		ROD	
10465	1		CLAMP ASSY	
10464	1		CLAMP ASSY	
10442	1		MUFFLER ASSY COMPLETE	
10284	1		ENGINE BREATHER TUBE	
10428	1		RIGHT STACK ASSY	
10427	1		LEFT STACK ASSY	
10423	1		TAILPIPE SUPPORT	
10392	1		CABIN HEAT BOX ASSY	
10420-2	1		AIR FILTER	
11502	1		CARBURETOR AIR BOX ASSY	
10247	1		SPINNER PLATE	
10070	1		ENGINE MOUNT ASSY	
PART NO.	NO REQ		MATERIAL	

SCALE 6 IN. = 1 FT. & NOTED
TOTAL WT. LBS.
FINISH - PIPER SPECIFICATION #10
MANUFACTURING PRACTICES - PIPER SPECIFICATION #9

"This drawing is the property of the Piper Aircraft Corp. and its possession by unauthorized persons shall not be construed as permission to reproduce for sale in whole or in part any devices shown thereon."

LET	REVISION	DATE	BY
CE	115[illegible] 10302 & 10309; 10836[illegible] 10836-10420-2 [illegible] ATT. ADDED; 72381-16 ATT. 7345[illegible] 71991 REV.	1-20-48	R.C.
CA	104[illegible] REMOVED [illegible]	[illegible]	R.C.
CZ	REDRAWN & REVISED	4-21-47	C.E.K.

MODEL	PER PLANE	NEXT ASSEMBLY	SUPERSEDES	S. P. BY

PIPER AIRCRAFT CORP.
LOCK HAVEN, PENNA.

DRAFTSMAN	CHECKER	STANDARDS
C.E.K. 4-21-47	R.D.M. 5-7-47	

POWER PLANT

75266

POWER PLANT - (PA12)